BONDS 5811

BONDS Robotics Status Report: Week 1

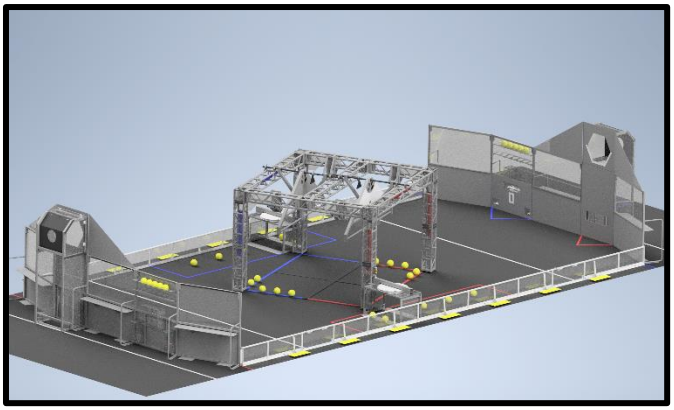

The year has just begun. This year is the first to have an asymmetrical field and the necessity of feeding game elements to the opposing alliance!

The game this year may seem straightforward from the audience's perspective, but the minds of the drive teams will be in a relentless challenge of cooperation and knowledge of the rules. The problem the team must face this year is all about energy. The shields at FIRST city are down and they need the help of FRC teams around the world to recharge them. The teams have to get the yellow power cells into the power relay. The main obstacle about this is not only the human player being on the opposite side of the field from the relay, but you must also do it in stages! You can only charge the shield so much before you have to go to the control panel and change the settings. That is why the drive team is constantly vigilant on what their next move is as an alliance.

Kickoff

To start the BONDS season out we went to West Carrollton High school for the live FRC kickoff. We were there with Pirate Robotics 6032, Innovators 3138, Vault 6936, Beyond the Stars 7434, and INSPIRE 4283. The first half of the day started with us watching and learning the game. However once we ate lunch and got the manual all the teams broke up. Members from multiple teams created sub-groups to share ideas about this year's challenge. With the discussions, most teams agreed that there were three things a robot needs to accomplish. It had to climb and hopefully balance on the scale, be capable of spinning the control panel, and be able to charge the shields by shooting power cells.

BONDS 5811

Strategy Meeting

The day after kickoff, we started right up with working up the team's strategy plan. Everybody on the team were electric with ideas in their heads. With the preliminary design, review coming up they started on a broad design of the robot, what we want to focus on, and shared innovative solutions for how we were going to solve each problem. The fruit of our labor turned into the division of members into five groups for prototyping and having a 15-item long priority list. Some of the choices seem self-explanatory but others we took an extreme approach. For example, we prioritized the ability to carry a robot on the scale with us. The scale in the game earn points for each robot and balancing. With three robots, it becomes the choice whether we are going to balance or all three climb up. If we know we are not going to balance then we can carry another robot with us to make up our points. Being able to rotate our manipulators could also be worth our while during the season with the possibility of autonomous aiming!

OUR PRIORITY LIST

1. Drive (and turn)
2. Move in auto (cross line)
3. Drive over lumps/park
4. Drive through trench run
5. Intake from ground
6. Intake from loading station
7. Store 5 balls
8. Climb
9. Climb centered
10. Shoot into outer goal
11. Rotation control
12. Position control
13. Active climb adjustment
14. Lift a partner
15. Shoot into inner goal

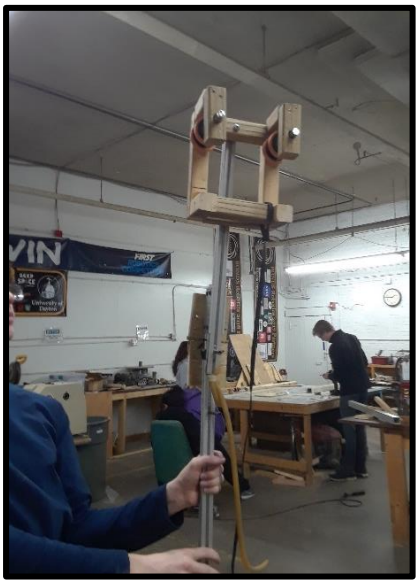

Climber

The climbing team began protoyping to prove the usefulness of a gravity adjusting mechanic and being able to drive on the rail of the scale. The hinge in the middle of the climber will let the robot hang freely with gravity always keeiping it lined up under the scale. The wheels atop the system are to pull the robot left and right to blance with the robot on the other side of the scale. This mechanism will be used in the "end game" so being able to get off the scale is unecessary! This allows us to just dispatch the robot from the field manually after the match.

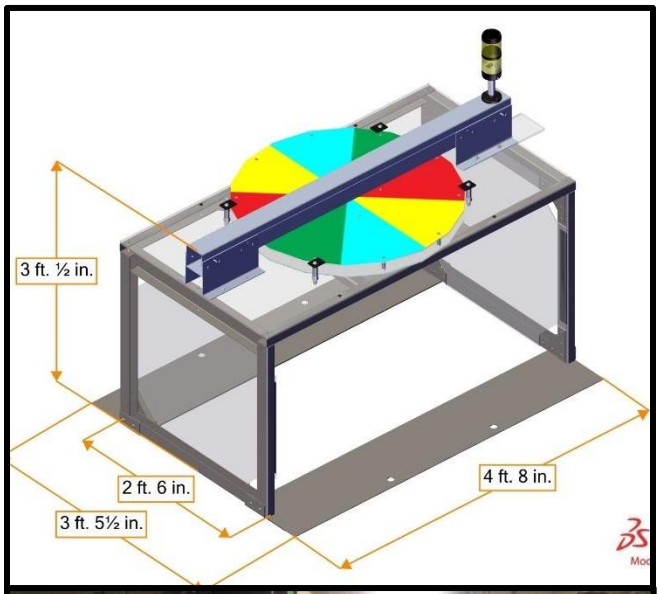

Control Panel

The game this year is in stages. You can only score so many power cells until one of the teams on you alliance has to go to the control panel. The control panel is a spinning color wheel. Depending which stage of the game you are in you may have to spin it at a certain speed for an amount of rotations or change it to a specific color. The team started to deal with this problem by sketching out different approaches. The team then listed the pros and cons of each one until we decided on one we wanted to focus in on and write out dimensions for. We decided to use two banebot wheels to spin horizontally to push the control panel. To mount the wheels we needed holes for the bearings however the drill bit that was being used was crooked and would not make the holes correctly. To work around this we cut the holes using the X-Carve and it worked perfectly. Once the prototype was working we had to fix the field recreation of the control panel. The team then began testing. We swapped out the banebot wheels for different kinds and found compliant wheels to work best.

Storage

This year you can start with three power cells and control 5 at one time durring the game. We started off with this curved bannana design. Our thought process with this was to take in balls from bellow and have them push each other up to a second level that we will shoot from. The only problem with this design is in he middle of the semi-circle is empty space which wastes some of our hiehgt restraints.

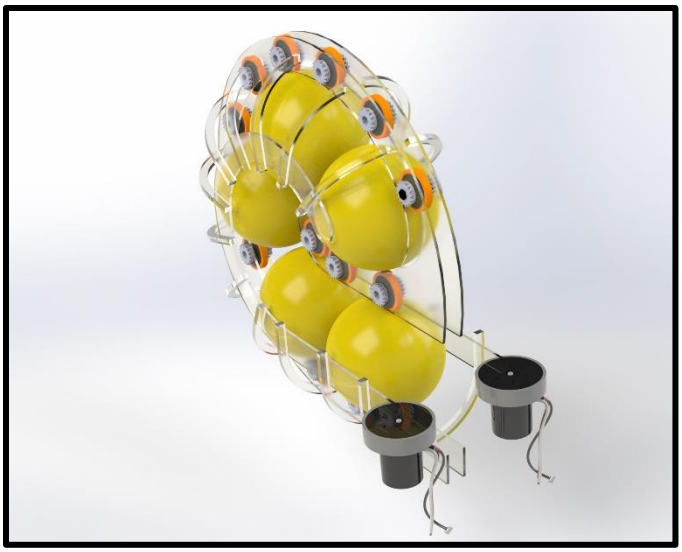

We later changed the design to one that's more like a snail shell which is where it got its new name, "the snail". The intake in this cad model is subject to change. The two different intake mechanisms we were deciding between were two wheels as seen in the cad or two bars of more banebot wheels that would sit vertically side by side. We plan to use the force of the balls and banebot wheels to push the powercells to the second level of the robot. With this new design we can use the wheel in the middle to help push multiple balls at once while also minimizeing space. We plan to use a system of chains and gears so we will only need to use 3 or less motors. This system would also make all of the wheels move simulatnsly in sync with each other.

Shooter

We started prototyping with wood and two wheels to find how useful this simpler design would be. We learned that the compresion and power of each wheel can change how the powercell will be shot. Our testing ended with us choosing a 4½ inch opening to shoot the balls. We were able to make shots from half way across from the field! We can also code the robot to arch the ball left and right by choosing how much power to use with motors. We plan on adding a smaller angled version of this prototype to the final snail design.

Drive Train

With most sub-teams protoyping we also had a handful of members work on another one of our robots Goldeneye. We swapped out the wheels and cleaned up wires that weren't in use any more. Once the old robot was spruced up we looked into possibly recycling parts of it or basing this years design off of it. We think the overal shape of Goldeneye's drive train may be perfect for holding the components we plan for.

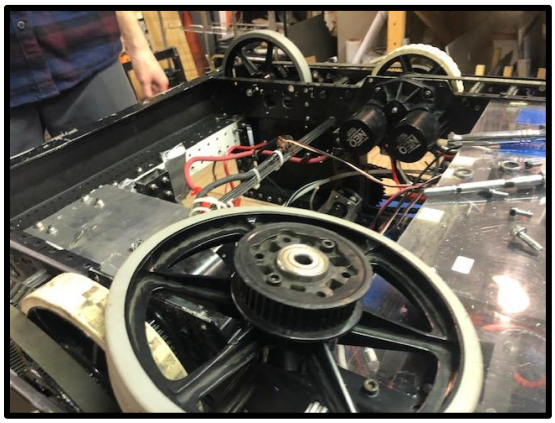

BONDS 5811

Programming

Programming started this season with cleaning up the space and updating our software. We looked into what is new with the 2020 updates and went on to discuss how we can utilize sensors and vision in programming. For example, the power relays that we have to shoot the balls into have reflective tape in them. We can use this as a reference to make our robot assist the aim of the driver. Although the shooter itself cannot move unless we rotate the entire robot, we can arch the ball to make the shot if we cannot look directly at the goal.

Preliminary Design Review

We invited eight STEM experts into our space to provide feedback. We started the review showing them the 2020 infinite recharge video. Once they knew what we were up against this year, we went into our goals for this season. The team wants to win regionals, be an alliance captain, and be able to consistently run every match. To achieve these we showed our strategy. Our strategy for this year was to focus on the different points: ranking points and match points. The team with the most match points win the match earning ranking points. The team with the most ranking points win first place. Ranking points can also be earned during matches by doing difficult tasks such as hanging for 65 match points or making it to the stage three of the game. The panel was also presented with our blob cad that shows how everything will be put together. The red is the intake mechanism, the green is storage, and the blue is a possible buddy system. We showed the idea where our climber was storage, so we could mount another robot

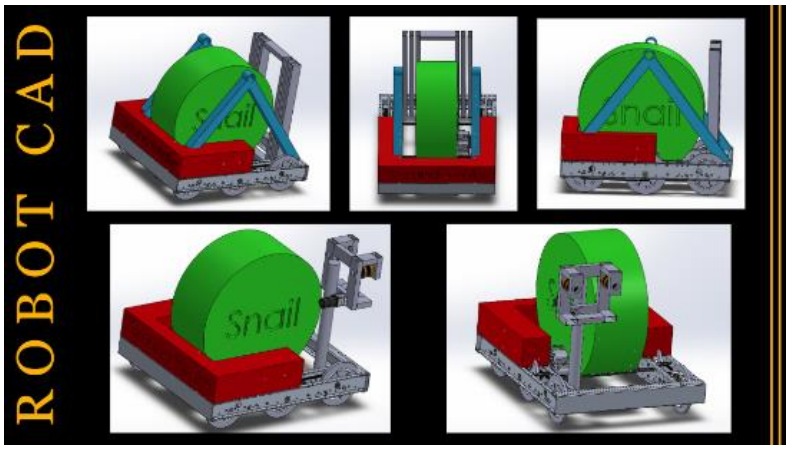

under us to carry with us to earn more points for hanging!

Thank you to all of our sponsors! Without your continuing support, we would not be able to compete each year and Bring Opportunities Near Dayton Students. We are grateful to represent each one of you not only as sponsors to our team but also as partners to the Dayton region STEM community. The year has just begun. We are ready to get started and if you are a past sponsor, who has not yet spoken with members of our team this year for a checkup, please contact us and we can set up a meeting! BONDS 5811